Evaluation kit for single-channel low-side non-isolated EiceDRIVER™ gate driver IC 1EDN7512B

KIT_DRIVER_1EDN7512B

Vincent Chi Zhang (IFAT PMM ACDC AE)
Florian Zechner (IFAT PMM ACDC AE)

- restricted -

General description

Introduction

This evaluation kit provides a test platform for Infineon's single-channel non-isolated gate driver IC EiceDRIVER™ 1EDN7512B in SOT-23 5pin package. The kit can be placed on a breadboard to connect the power supply and signals through the use of hook-up wires.

Function generators and microcontrollers, like Infineon's XMC™ microcontroller family, are able to generate suitable signals for MOSFETs. For this reason, gate driver ICs, like the one present on this evaluation kit, are necessary to switch power MOSFETs in DC-DC converters, PFC stages and full- and half-bridge stages. An Infineon MOSFET, for example from the CoolMOS™ or OptiMOS™ families, can be selected to be switched by the gate driver IC in this board. This will allow the user to test the gate driver IC in different combinations with the MOSFET switches.

A use case for this kit is, to test the fundamentals of gate drivers in power electronics and demonstrate the capability of the various MOSFET gate drivers.

Summary of features:

Single-channel low-side non-isolated gate driver IC

- Peak current: 5 A
- Package: THD
- Optimized for CoolMOS™ and OptiMOS™ devices

Recommendation: Please add heatsink for the power MOSFET

Copyright © Infineon Technologies AG 2018. All rights reserved. **Infineon Proprietary**

Schematic

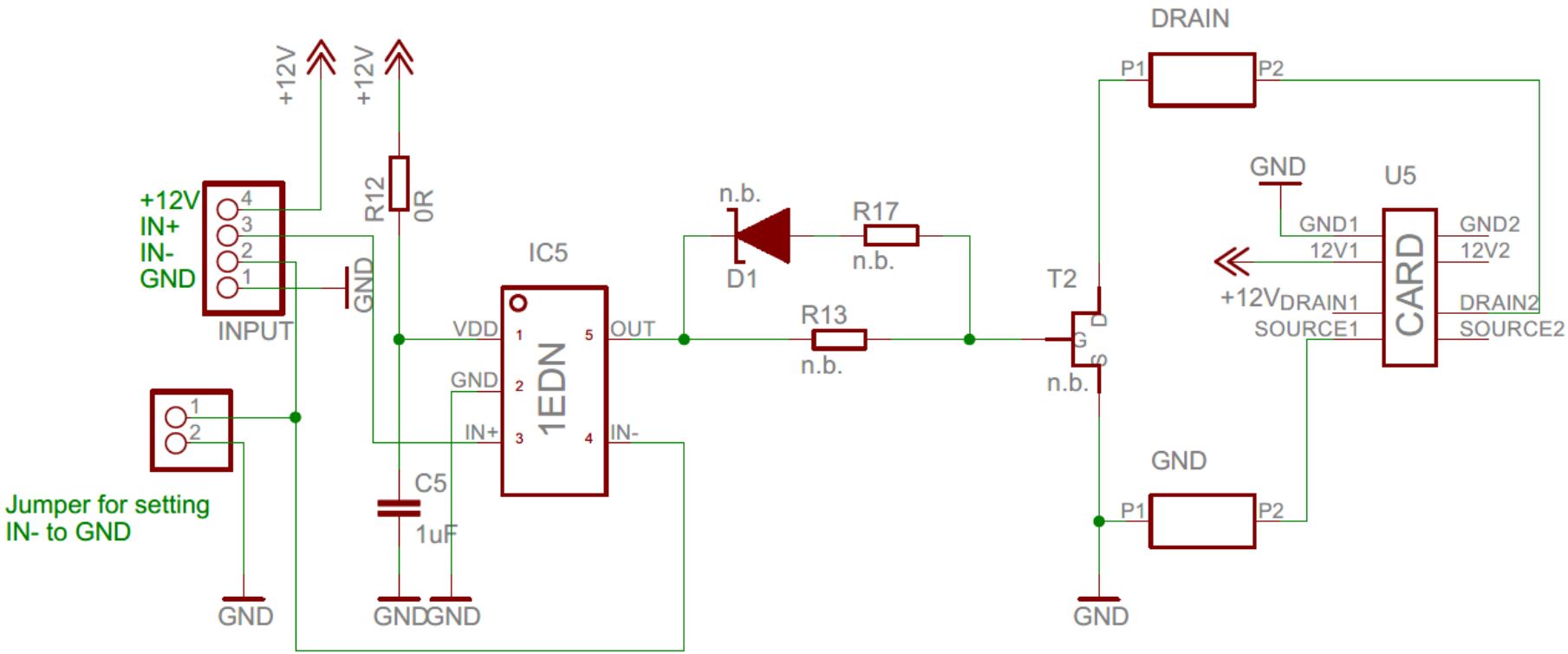

Copyright © Infineon Technologies AG 2018. All rights reserved. **Infineon Proprietary**

Cross reference

Sales_product_Name	Gate Driver	Channel	Isolation	Package
KIT_DRIVER_1EDN7511B	1EDN7511B	1	Non-isolated	SOT-23 6-pin
KIT_DRIVER_1EDN7512B	1EDN7512B	1	Non-isolated	SOT-23 5pin
KIT_DRIVER_1EDN7512G	1EDN7512G	1	Non-isolated	WSON 6pin
KIT_DRIVER_2EDN7524F	2EDN7524F	2	Non-isolated	DSO 8pin
KIT_DRIVER_2EDN7524R	2EDN7524R	2	Non-isolated	TSSOP 8pin
KIT_DRIVER_2EDN7524G	2EDN7524G	2	Non-isolated	WSON 8pin
KIT_DRIVER_1EDN7550B	1EDN7550B	1	Non-isolated	SOT-23 6pin
KIT_DRIVER_2EDN7275F	2EDN7275F	2	Functional isolation	NB-DSO-16 150mil
KIT_DRIVER_2EDN8255H	2EDN8255H	2	Reinforced isolaton	WB-DSO-16 300mil

Copyright © Infineon Technologies AG 2018. All rights reserved. **Infineon Proprietary**

Support

Technical Material	› Application Notes › Simulation Models › Datasheets › PCB Design Data	› www.infineon.com/kit-driver-1edn7512b
Evaluation Boards	› Evaluation Boards › Demoboards › Reference Designs	› www.infineon.com/evaluationboards
Videos	› Technical Videos › Product Information Videos	› www.infineon.com/mediacenter

Copyright © Infineon Technologies AG 2017. All rights reserved.

Support
Online tools and services

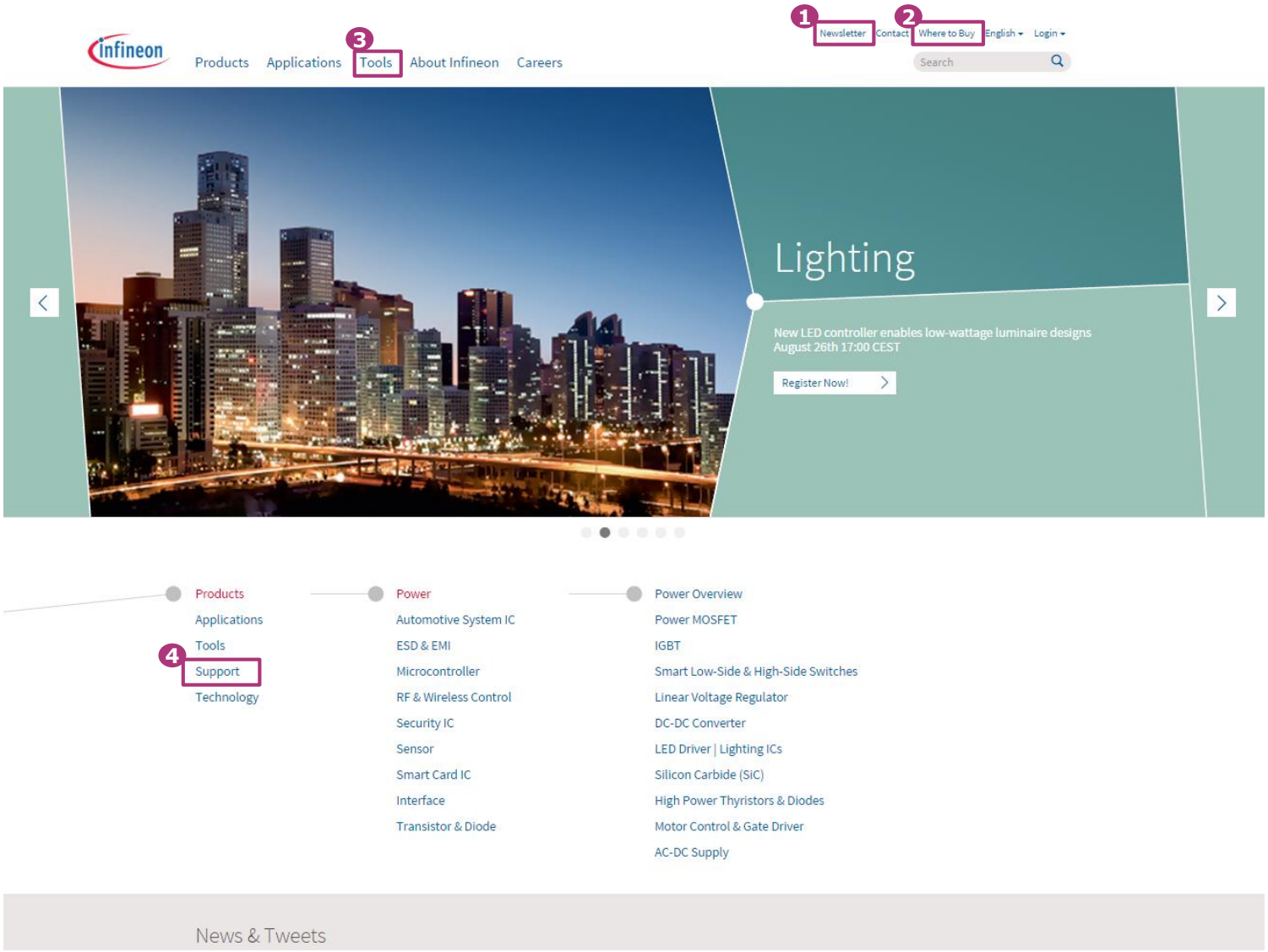

1. **Subscribe to Newsletter**
2. **Where to Buy**
3. **Tools, Finders and Selectors**
4. **Support**

Copyright © Infineon Technologies AG 2017. All rights reserved.



Part of your life. Part of tomorrow.

Infineon